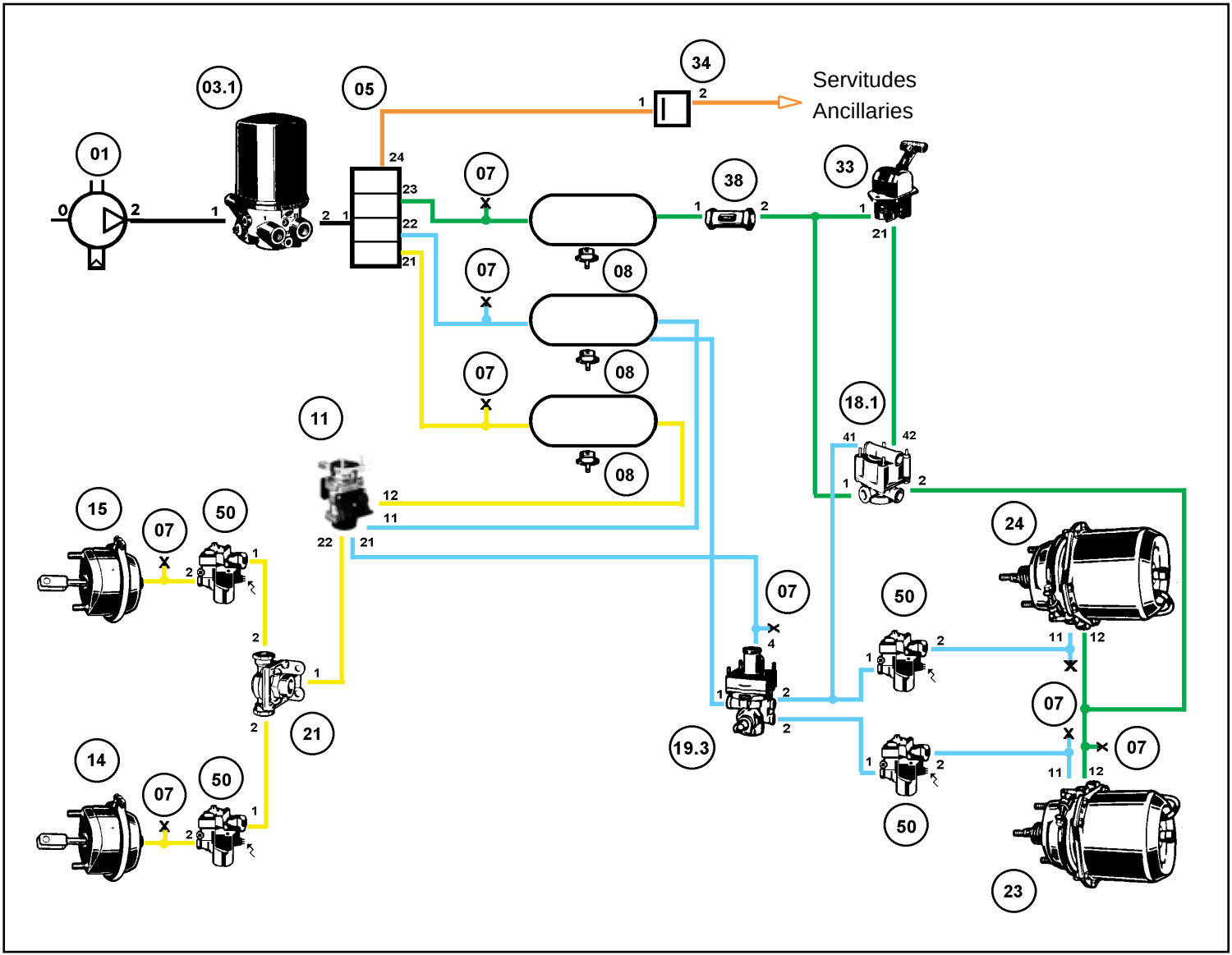
Servitudes
Ancillaries
01
03.1
05
34
07
08
38
33
18.1
11
15
14
50
21
19.3
24
23