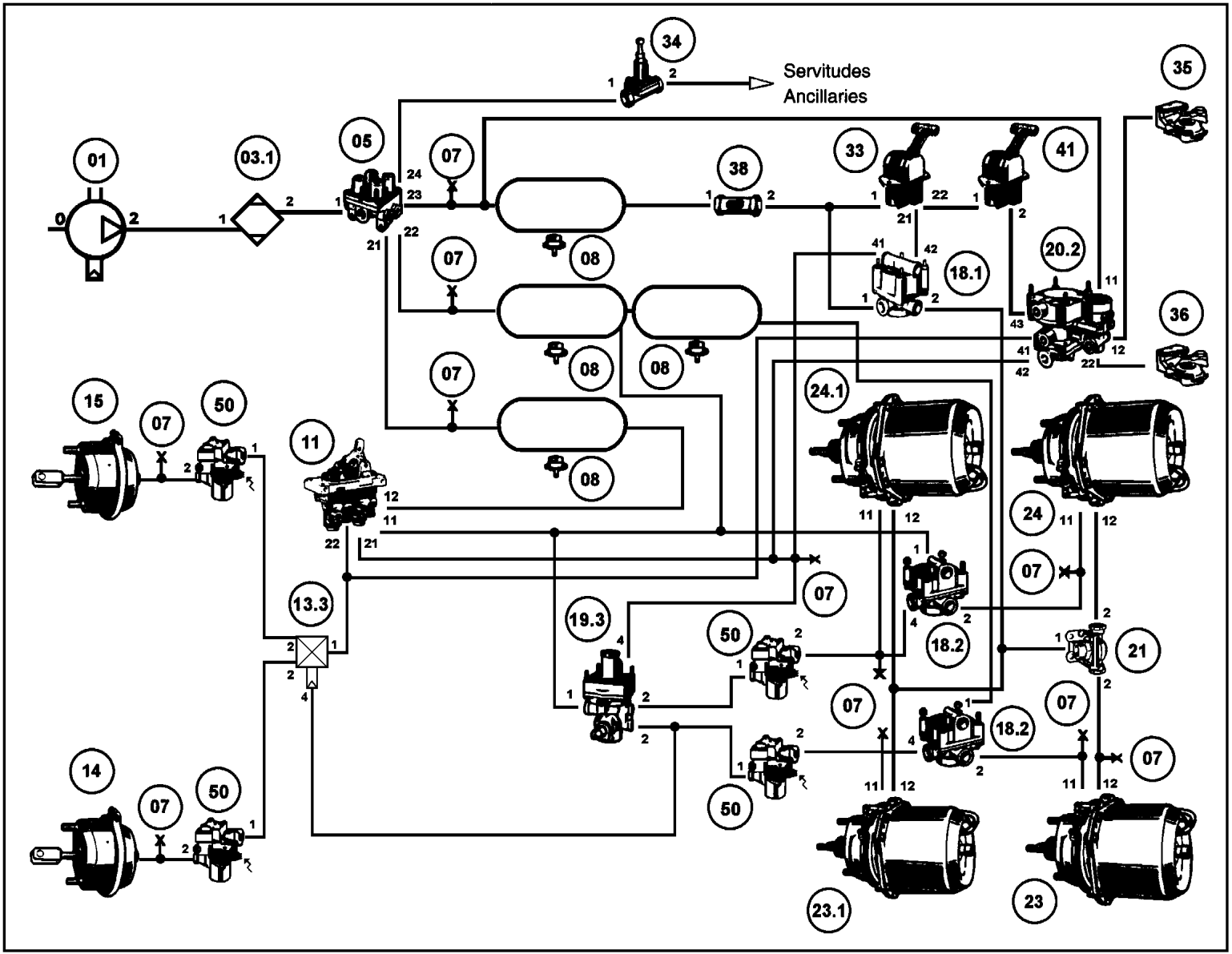
Servitudes
Ancillaries
01
03.1
05
07
08
08
08
08
07
07
07
34
35
36
33
41
38
20.2
18.1
15
50
11
24.1
24
13.3
19.3
50
18.2
21
18.2
14
50
50
23.1
23