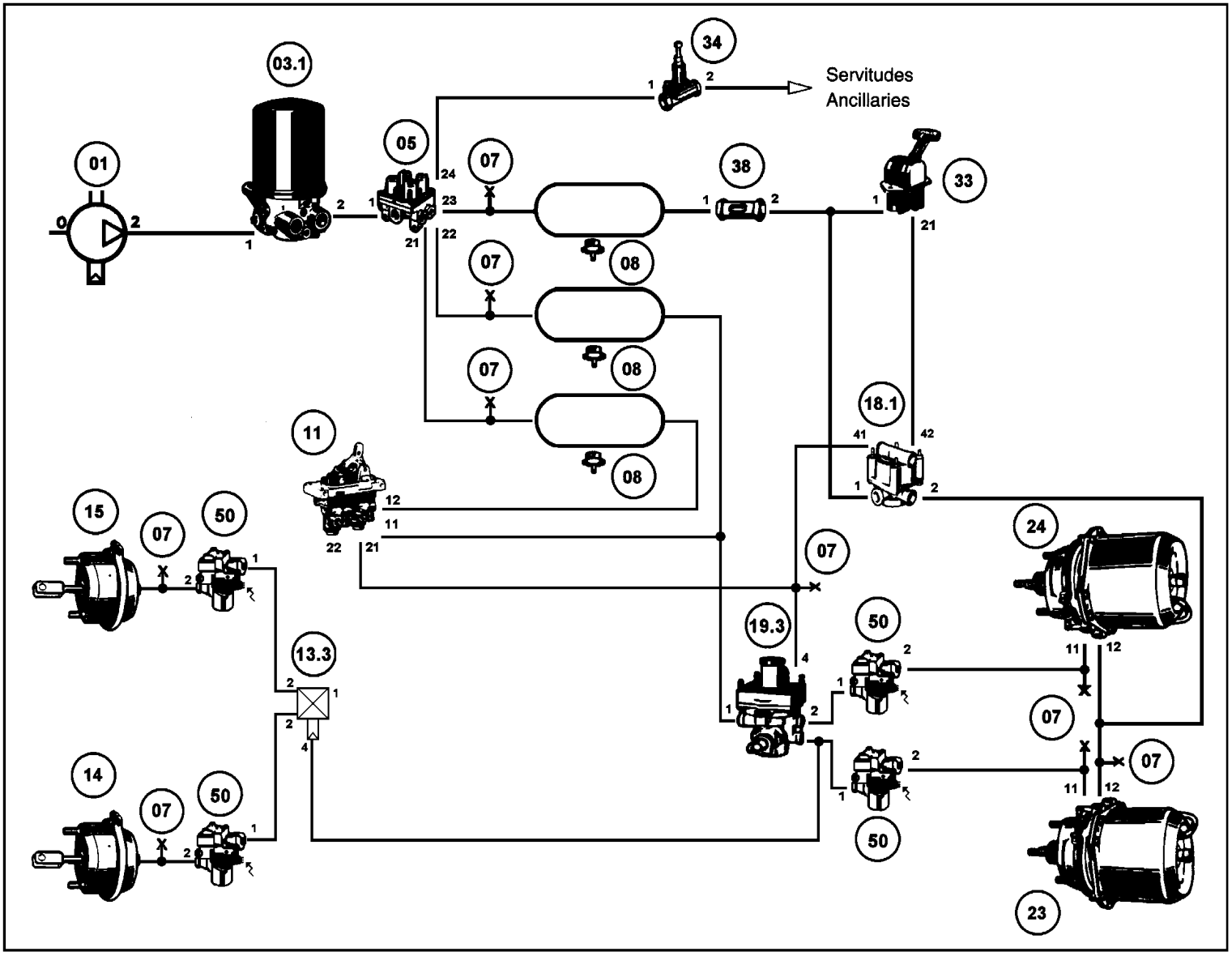
Servitudes
Ancillaries
01
03.1
05
07
08
11
13.3
14
15
18.1
19.3
23
24
33
34
38
50