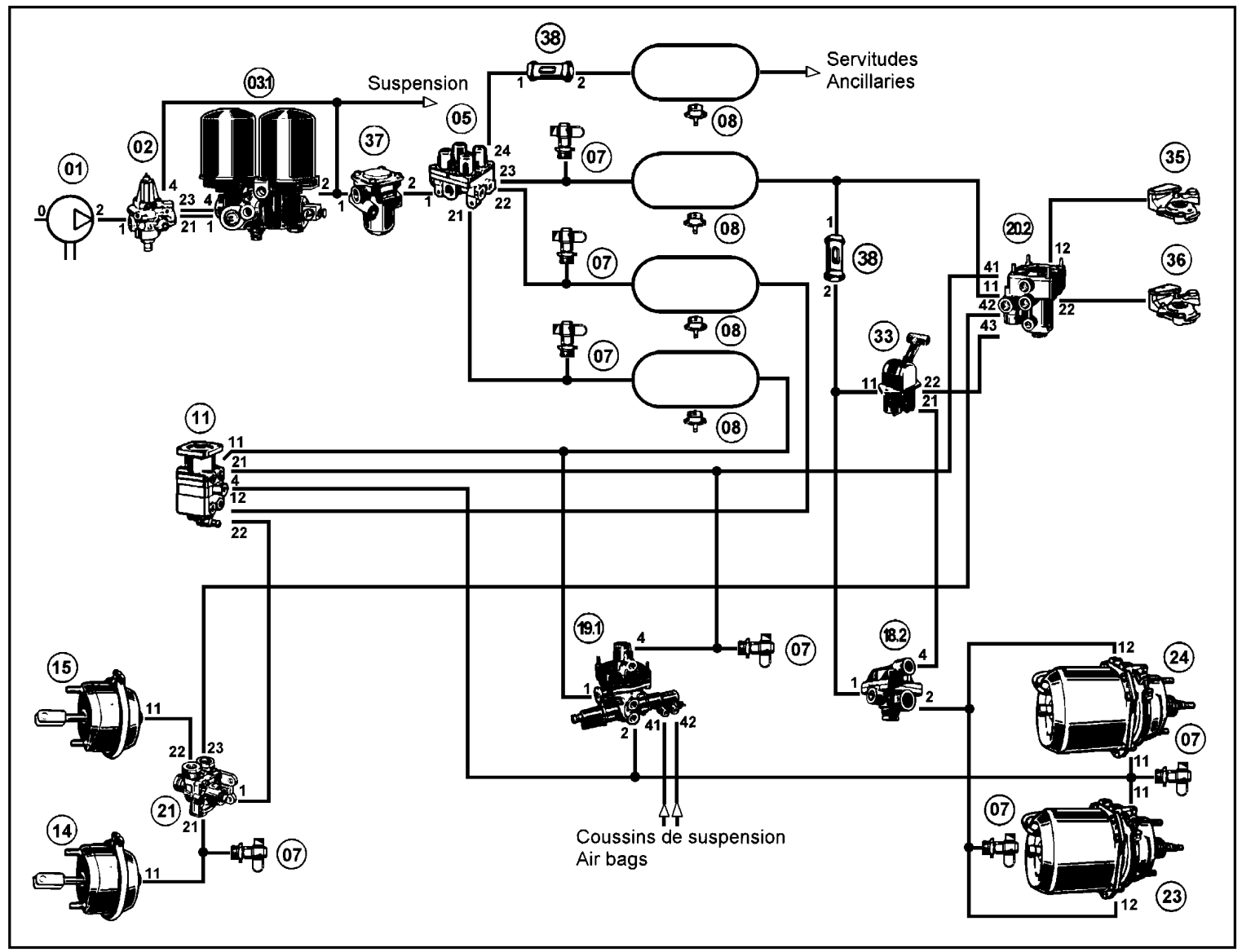
Suspension
Servitudes
Ancillaries
Coussins de suspension
Air bags
01
02
03.1
05
07
08
11
14
15
18.2
19.1
20.2
21
23
24
33
35
36
37
38