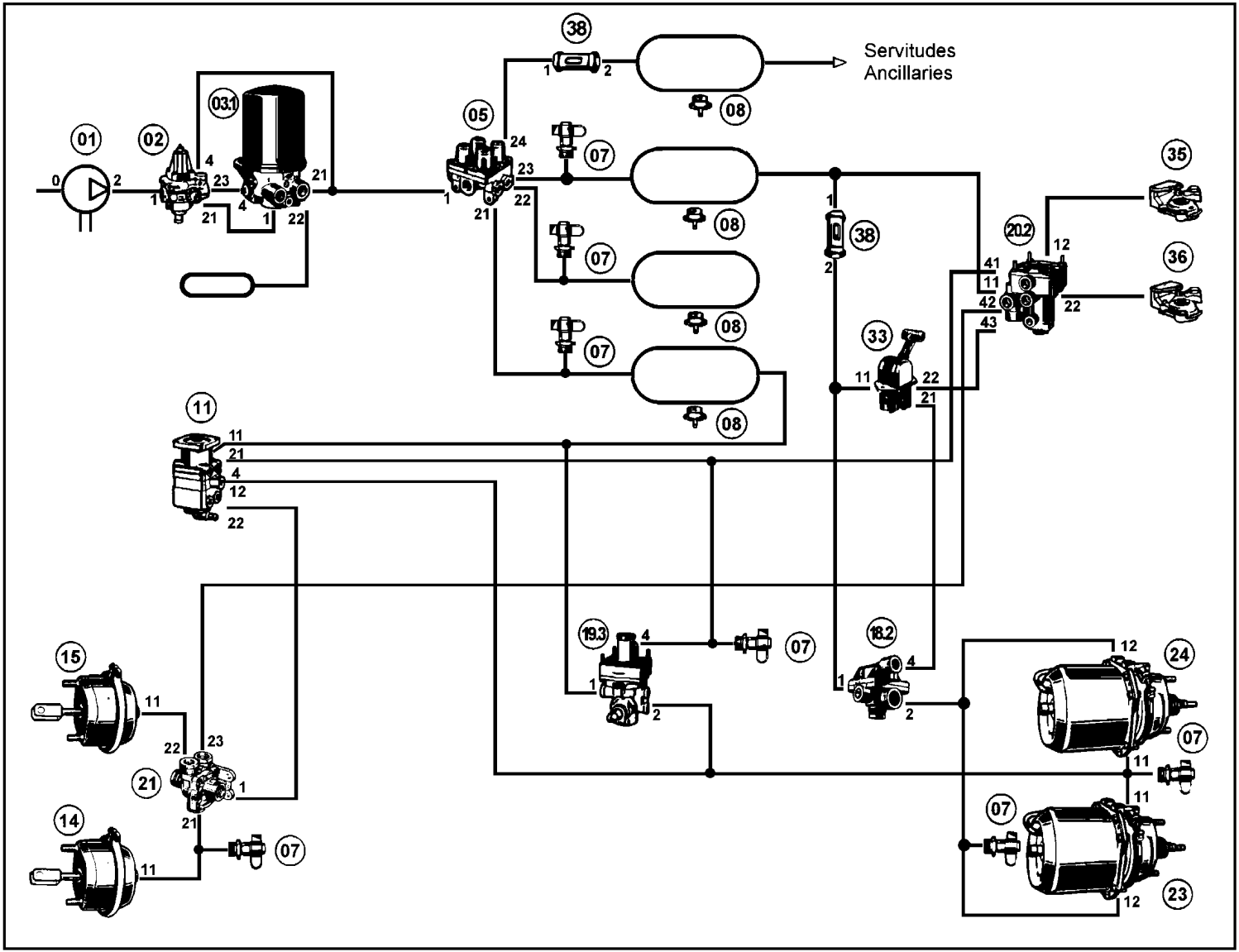
Servitudes
Ancillaries
01
02
03.1
05
07
08
11
14
15
18.2
19.3
20.2
21
23
24
33
35
36
38