TOUTE COMMUNICATION OU REPRODUCTION DE CE DOCUMENT, TOUTE EXPLOITATION OU COMMUNICATION DE SON CONTENU SONT INTERDITES, SAUF AUTORISATION EXPRESSE. TOUT MANQUEMENT A CETTE REGLE CONSTITUE UN ABUS INDUSTRIEL ET PROSEDE SIEN AUTEUR AU VERSEMENT DE DOMMAGES ET INTERETS. TOUS DROITS DE PROPRIETE INDUSTRIELLE OU LITTERAIRE SONT RESERVES AUX MODELES.

NON E PERMESSO CONSEGNARE A TERZI O RIPRODURRE QUESTO DOCUMENTO, NE UTILIZZARNE IL CONTENUTO O RENDERLO COMUNQUE NOTO A TERZI, SENZA AUTORIZZAZIONE ESPLICITA. OGNI INFRAZIONE COSTITUIRA UN EVIDENTE ABUSO E COMPORTERA IL RISARCIMENTO DEI DANNI SUBITI. E' FATTA RISERVA DI TUTTI I DIRITTI DERIVANTI DA BREVETTI O MODELLI.

WELCHE ANWENDUNG DIESER UNTERLAGE, VERWERTUNG UND MITTEILUNG IHRES INHALTS NICHT GESTATTET SOWEIT NICHT AUSDRUECKLICH ZUM VERZICHT ERMAECHTIGT WIRD. ZUWIDERHANDLUNGEN VERPFLICHTEN ZUM SCHADENERSATZ. ALLE RECHTE FUER DEN FALL DER PATENTERTEILUNG ODER GEBRAUCHSMUSTER-EINTRAGUNG VORBEHALTEN.

COPYING OF THIS DOCUMENT AND GIVING IT TO OTHERS AND THE USE OR COMMUNICATION OF THE CONTENTS THEREOF, ARE FORBIDDEN WITHOUT EXPRESS AUTHORITY. CONTRAVENTION OF THIS RESTRICTION WILL CONSTITUTE AN EVIDENT ABUSE AND RESULT IN A LIABILITY TO THE PAYMENT OF DAMAGES. ALL RIGHTS ARE RESERVED IN THE EVENT OF THE GRANT OF PATENT OR REGISTRATION OF A UTILITY MODEL OR DESIGN. THIS DOCUMENT IS THE SUBJECT OF COPYRIGHT.

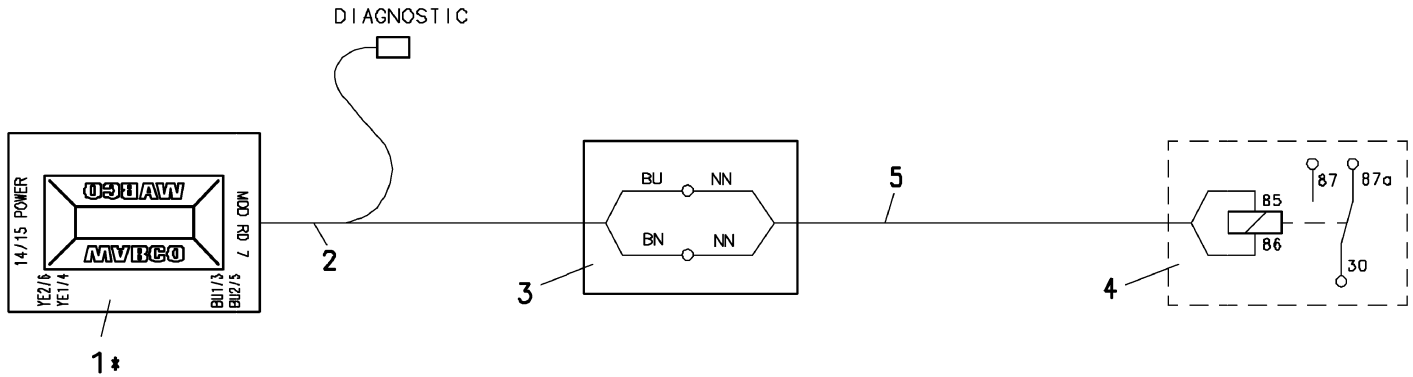

GENERIC IO D1: PARAMETER SET 246 116 003 0
PLEASE ALSO NOTICE RETARDER'S USER GUIDE

* OPTION

POS.	PCS.	DENOMINATION		PRODUCT IDENTIFICATION NO.
5	1	CABLE	NOT PART OF	OUR PORTFOLIO
4	1	RETARDER CONTR.RELAY	NOT PART OF	OUR PORTFOLIO
3	1	JUNCTION BOX		446 010 092 2
2	1	Y-CABLE		449 617 ... 0
1	1	VCS II-MODULATOR *	400 500 081 0/	400 500 070 0

POS.	PCS.	DENOMINATION	PRODUCT IDENTIFICATION NO.	DCN-NO.	REV.	DATE
				094146	A	06-01-25

CADAM-DRAWING COPYRIGHT

DATE	SIGNATURE
DRAWN 06-01-17	APITHY
CHECKED 06-01-17	RUMPF
STANDARDIZATION	

WABCO

VCS II RETARDER CONTROL

T.R.I.	PRODUCT IDENTIFICATION NO.	CODE FOR DOCUMENT	SHEET
171	841 802 137 0	402	01
SIZE A 3	CODE FOR FUNCTION 0407	CODE FOR SHAPE	REPLACEMENT FOR

100mm