TOUTE COMMUNICATION OU REPRODUCTION DE CE DOCUMENT, TOUTE EXPLOITATION OU COMMUNICATION DE SON CONTENU SONT INTERDITES, SAUF AUTORISATION EXPRESSE. TOUT MANQUEMENT A CETTE REGLE CONSTITUE UN ABUS ENGAGE LA RESPONSABILITE DU CONTREVENANT. DES DOMMAGES ET INTERETS. TOUS DROITS DE PROPRIETE INDUSTRIELLE OU LITTERAIRE SONT RESERVES.

NON E PERMESSO CONSEGNARE A TERZI O RIPRODURRE QUESTO DOCUMENTO, NE UTILIZZARNE IL CONTENUTO O RENDERLO COMUNQUE NOTO A TERZI, SENZA AUTORIZZAZIONE ESPLICITA. OGNI INFRAZIONE COSTITUIRA UN EVIDENTE ABUSO E COMPORTERA IL RISARCIMENTO DEI DANNI SUBITI. E' FATTA RISERVA DI TUTTI I DIRITTI DERIVANTI DA BREVETTI O MODELLI.

WELTERHIN SOWIE VERVIELFÄLTIGUNG DIESES UNTERLAGE, VERWENDUNG UND MITTEILUNG IHRES INHALTS NICHT GESTATTET SOWEIT NICHT AUSDRÜCKLICH ZUM WEITERGEBEN ODER VERVIELFÄLTIGEN ERMÄCHTIGT. ZUWIDERHANDLUNGEN VERPFLICHTEN ZUM SCHADENSERSATZ. ALLE RECHTE FÜER DEN FALL DER PATENTERTEILUNG ODER GEBRAUCHSMUSTER-EINTRAGUNG VORBEHALTEN.

COPYING OF THIS DOCUMENT AND GIVING IT TO OTHERS AND THE USE OR COMMUNICATION OF THE CONTENTS THEREOF ARE FORBIDDEN WITHOUT EXPRESS AUTHORITY. CONTRAVENTION OF THIS RESTRICTION WILL CONSTITUTE AN EVIDENT ABUSE AND RESULT IN A LIABILITY TO THE PAYMENT OF DAMAGES. ALL RIGHTS ARE RESERVED IN THE EVENT OF THE GRANT OF PATENT OR REGISTRATION OF A UTILITY MODEL OR DESIGN. THIS DOCUMENT IS THE SUBJECT OF COPYRIGHT.

ONE-CIRCUIT AIR SUSPENSION SYSTEMS AND TRACTION HELP
MUST BE AGREED WITH THE AXLE MANUFACTURER

PAY ATTENTION TO 97 / 27 / EG

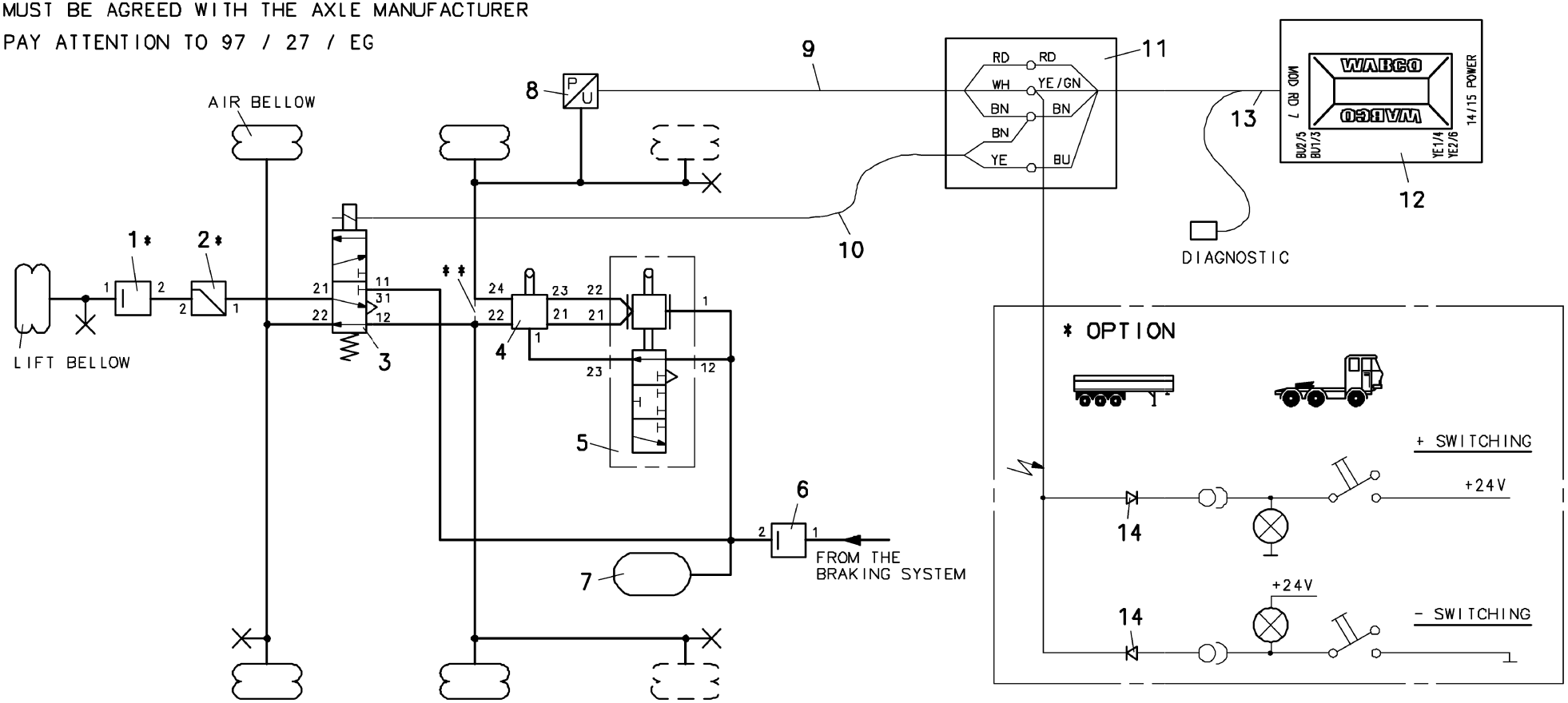

* OPTION
** 22 AND 24 CAN ALSO BE CONNECTED

PLASTIC PIPE 12×1,5
OR 10×1

PARAMETER SETTING BY PARAMETER SET 246 116 001 0
OR OPTIONALLY 246 116 004 0 (WITH TRACTION HELP)

PAY ATTENTION TO WIRING ISO 12098

PAY ATTENTION TO TRUCK WIRING

LIFT AXLE CONTROL VCS II

TIP SWITCH TRACTION HELP:

ACTUATED UP TO 5 SECONDS = START TRACTION HELP
ACTUATED > 5 SECONDS = FORCED LOWERING

CONTROL INDEPENDENT OF TRUCK

POS.	PCS.	DENOMINATION		PRODUCT IDENTIFICATION NO.	POS.	PCS.	DENOMINATION		PRODUCT IDENTIFICATION NO.	DCN-NO.	REV.	DATE
13	1	Y-CABLE		449 617 ... 0								
12	1	VCS II PREMIUM		400 500 081 0								
11	1	DISTRIBUTION BOX		446 010 092 2								
10	1	CABLE		449 422 ... 0								
9	1	CABLE		449 732 ... 0								
8	1	PRESSURE SENSOR		441 040 013 0								
7	1	AIR RESERVOIR		950 0								
6	1	CHARGING VALVE W/O BACKFLOW		434 100 125 0								
5	1	LEVELLING VALVE		464 006 100 0								
4	1	DREHSCHIEBERVENTIL		463 032 020 0								
3	1	LIFT AXLE VALVE		463 084 030 0								
2	1	PRESS.LIMITING VALVE	*	475 010 ... 0								
• 1	1	CHARGING VALVE W/O BACKFLOW	*	434 100 026 0	14	2	DIODE	E.G.WEHRLE	NOT WABCO	094146	A	06-01-25

CADAM-DRAWING COPYRIGHT		WABCO
DATE	SIGNATURE	
DRAWN 05-12-19	APITHY	LIFT AXLE CONTROL - VCS II
CHECKED 05-12-19	RUMPF	FULLY AUTOMATIC
STANDARDIZATION		WITH TRACTION HELP AND ONE-CIRCUIT LIFT AXLE VALVE
T.R.I. 171	PRODUCT IDENTIFICATION NO. 841 802 133 0	CODE FOR DOCUMENT 402 / SHEET 01
SIZE A 3	CODE FOR FUNCTION 0407	CODE FOR SHAPE / REPLACEMENT FOR

100mm